Promotion Board Circuit
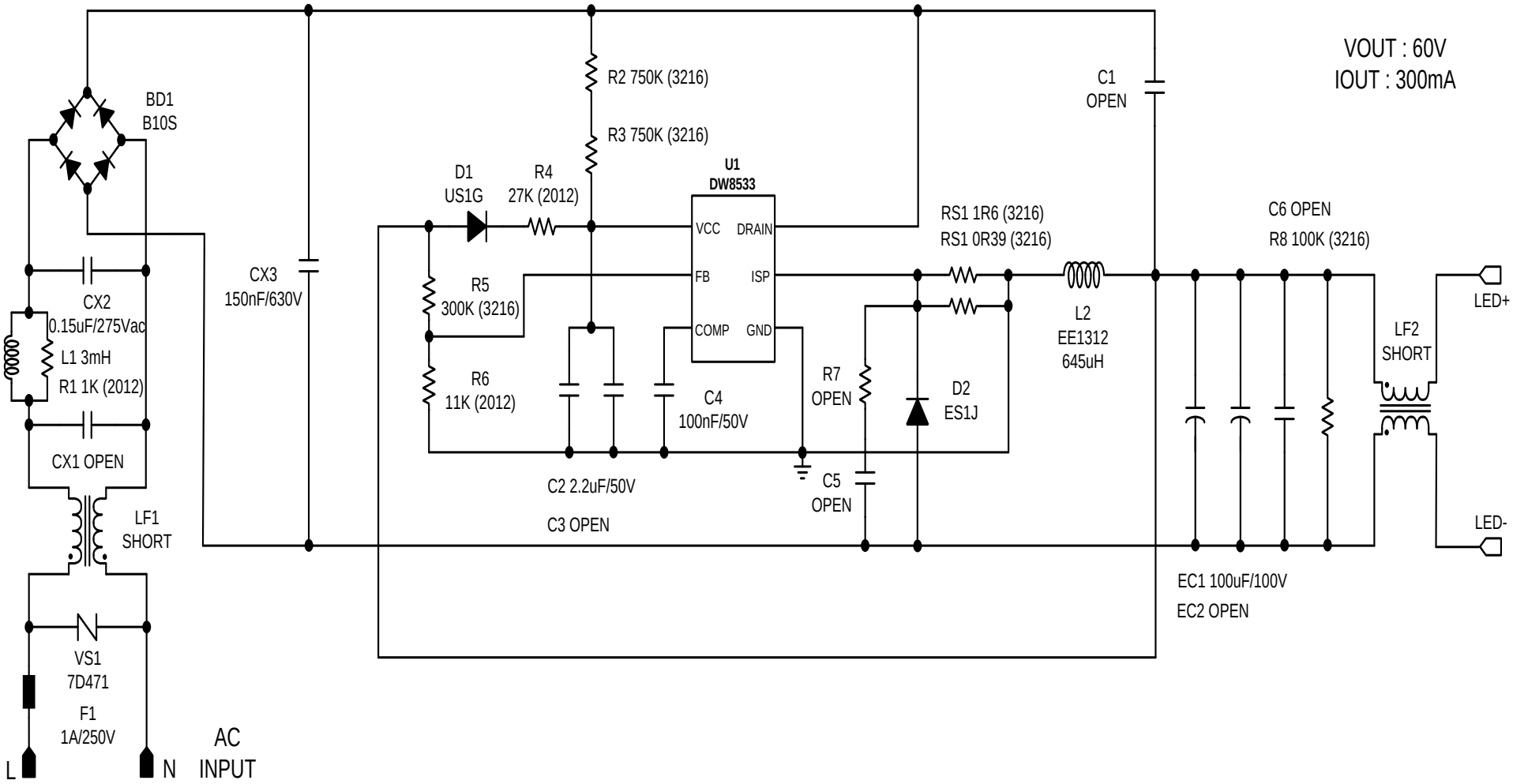
❖ Condition : VIN 90~260Vac, VOUT 60V, IOUT 300mA